BLCB - HORSE FENCE
(CROSSBUCK) Top & Bottom Rail Shall Alternate

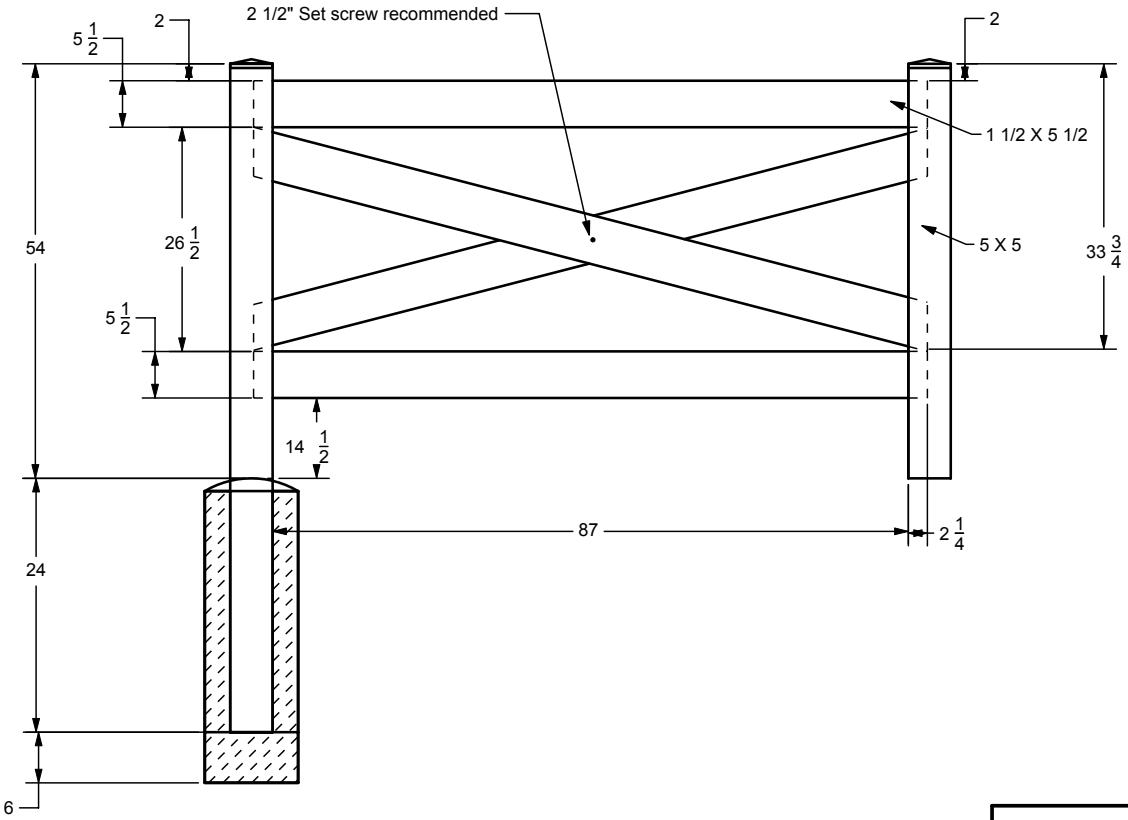

BILL OF MATERIALS

PART #	QUAN.	DESCRIPTION
BP5578	2	5 X 5 X 78
BRR1555192	2	1 1/2 X 5 1/2 X 191.75
BEC55	2	PYRAMID CAP

BLACKline™ hhp
HIGH HEAT PERFORMANCE

CrossBuck	Phone (360)-398-1824*Fax(360)-398-1845 1325 Marietta Ave Bellingham,WA Web Site: http://www.blacklinehhp.com
#: BL-CB	
REV : 6/17/2014	**DWG NUMBER** :
SCALE : 1 : 1	**SHEET** 1 OF 1
Property of Blacklinehhp	